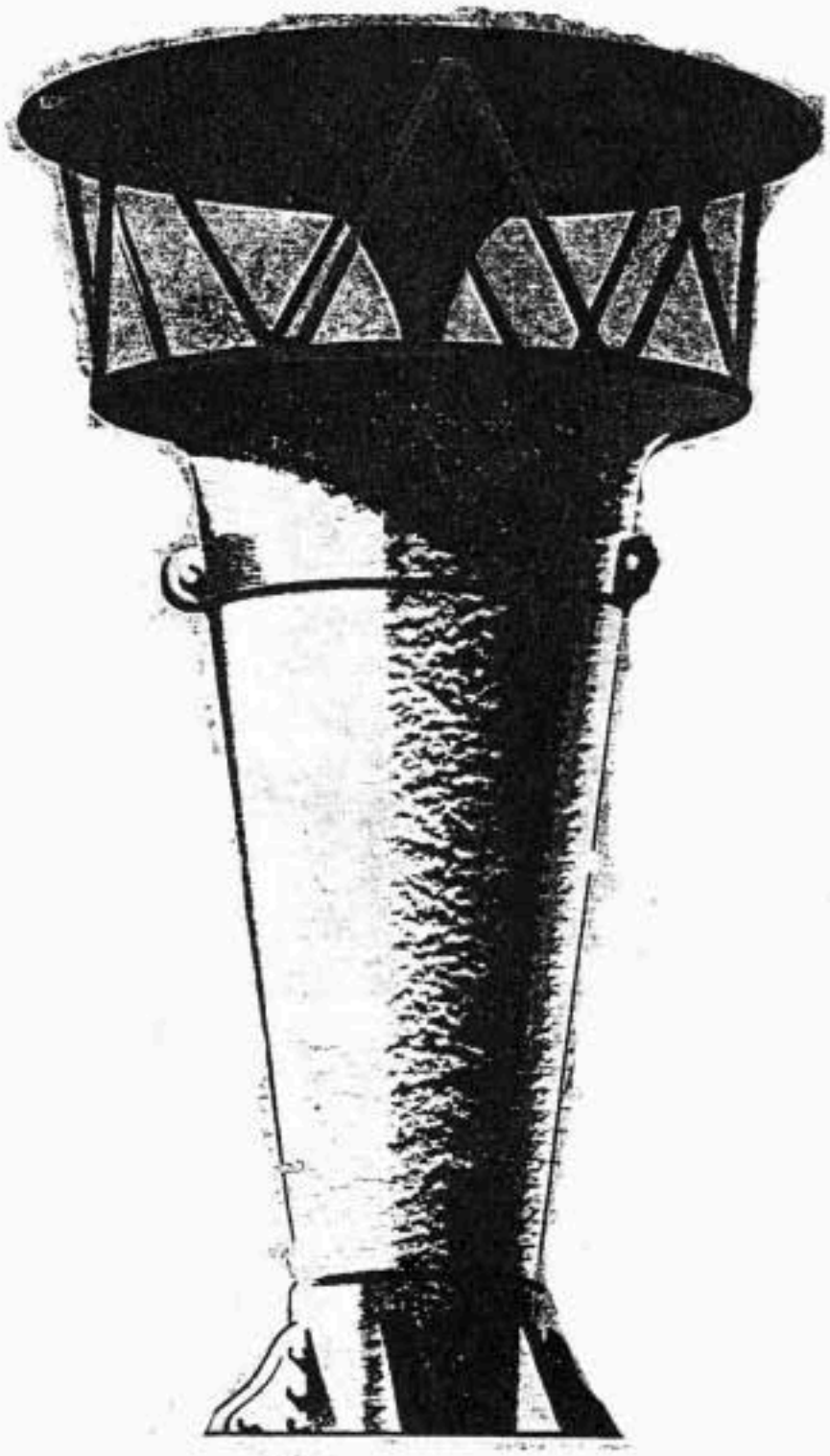

THE DIAPHONE

Chance PRODUCT

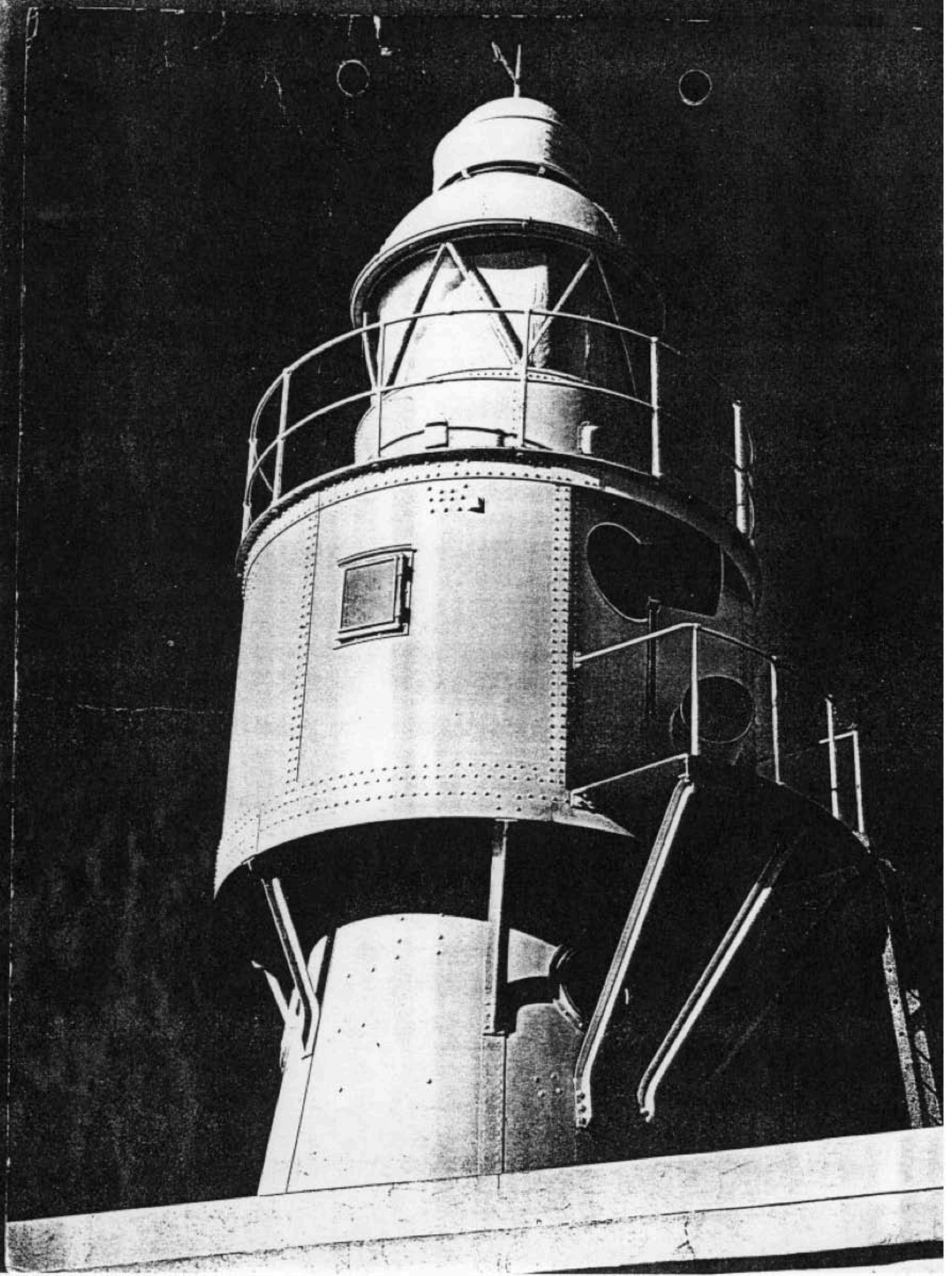

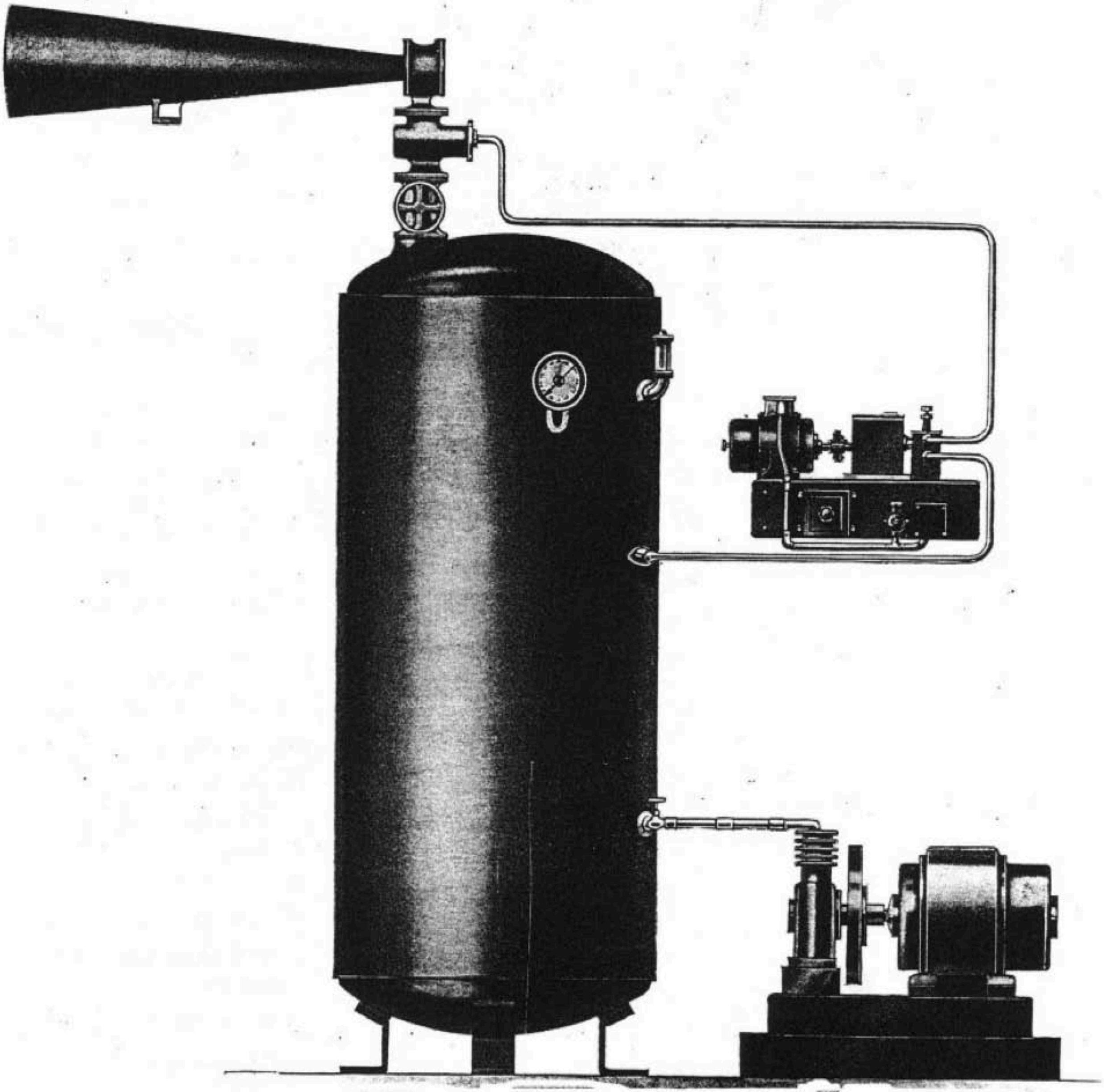

FOREWORD

On board ship sounds have more meaning than they have on land. A sound-signal has to compete with a host of other significant noises, and its usefulness depends not only upon its carrying power, but also upon some quality which renders it instantly recognisable, its meaning instantly clear.

Particularly important is this when the sailor depends upon such a signal for his bearing. That is one reason why the Diaphone has been adopted for major lighthouse and light-vessel installations throughout the world. For the Diaphone's note, with its characteristic grunt at the end of each blast, is something unmistakable, and speaks through the rival clamour of machinery, wind, bells, whistles and sirens like the voice of conscience.

There are many other reasons why the Diaphone is regarded, by world authorities, as one of the best sound-signals for aiding navigation at sea. Its note is steady and immediate, with none of the preliminary surging wail characteristic of many sirens ; this instantaneous response and simplicity of control enable precise blast sequences to be produced. The volume of sound is tremendous—in exceptionally favourable conditions audible ranges exceeding forty miles have been reported—and the mechanism is basically simple, robust in construction, and easy to maintain.

The following pages outline the mechanical principles of the instrument and give suggestions for its installation and use. It is clear, however, that the fullest particulars cannot be contained in a booklet of this size, and clients are invited to consult us upon the application of the Diaphone to any given fog-signalling problem.

en left: The Diaphone Installation at Dungeness.
(By courtesy of the Corporation of Trinity House).

Chance Brothers manufacture seven sizes of Diaphone, with piston diameters varying from 1½ to 10 inches. Comparative Audible Ranges are given in the table below for the respective sizes of piston. It will be appreciated that definite audible range cannot be guaranteed for any audible signal, on account of the unstable nature of atmospheric conditions ; the figures quoted below are conservative, for the atmospheric conditions prevailing in this country, but it is interesting to note that ranges exceeding 40 miles have been reported.

COMPARATIVE AUDIBLE RANGES OF THE DIAPHONE

Type and piston diameter in inches ..	A 1½	B 2¼	C 3	F 5	G 6¼	K 8½	L 10
Range : Sea miles	1-1½	1½-2	2-2½	3-5	4-6	6-8	7-10

HOW THE DIAPHONE WORKS (Type F and larger)

The Diaphone instrument itself (see Fig. 1) consists of Piston (**F**), Cylinder (**G**), and outer casing (**H**). In addition there is a resonator (**J**), the function of which is to reinforce the note produced by the instrument. (See page 5).

The outer casing, as will be seen from the illustration, contains an annular passage (**K**) at the rear of the instrument, around which the driving air passes, and an annular passage (**L**) in the front portion of the instrument, around which the sounding air passes. The Diaphone piston and cylinder have circumferential slits cut in the walls at the sounding end, and air ports drilled at the driving end.

Air for giving the reciprocating motion to the piston is admitted by the valve (**B**), and passes around the passage (**K**), being exhausted into the open through small ports (**M**) in the rear of the casing. The piston moves 90 complete cycles per second—taking up this speed instantly and maintaining it during the length of blast—as determined by the timing mechanism.

Air for sounding (or 'speaking') is admitted by valve (**C**) into the annular passage (**L**) surrounding the front end of the cylinder. The circumferential slits in the piston and cylinder are brought opposite one another by the reciprocating action, and thus the sounding air passing through the slits is cut 180 times per second, producing a sudden intense note and enormous volume of sound. A characteristic 'grunt' can be produced at the end of each blast, a distinction which renders the signal unmistakable.

Although the piston speed is 90 complete cycles per second, it should be noted that the actual speed of movement is little over 200 feet per minute, since the stroke is very short ; in this respect the Diaphone is much superior to the siren. The note produced is pitched approximately at F in the base clef.

HOW THE DIAPHONE WORKS (Types A, B and C)

Only one valve is employed for both reciprocating and sounding in sizes in A, B and C. In other respects the principle of operation is similar throughout the range of Diaphone types (see Fig. 11, page iii).

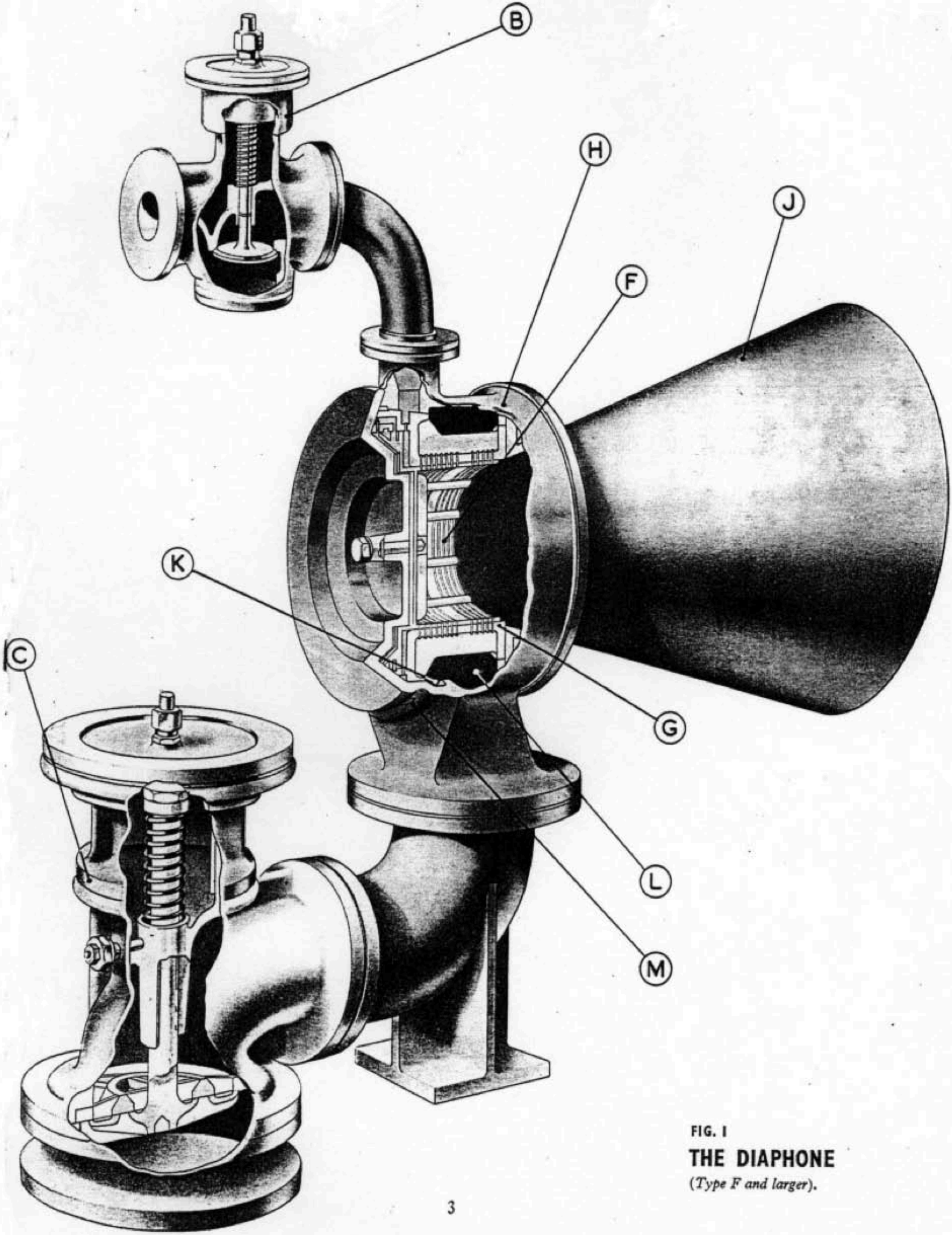

FIG. 1

THE DIAPHONE

(*Type F and larger*).

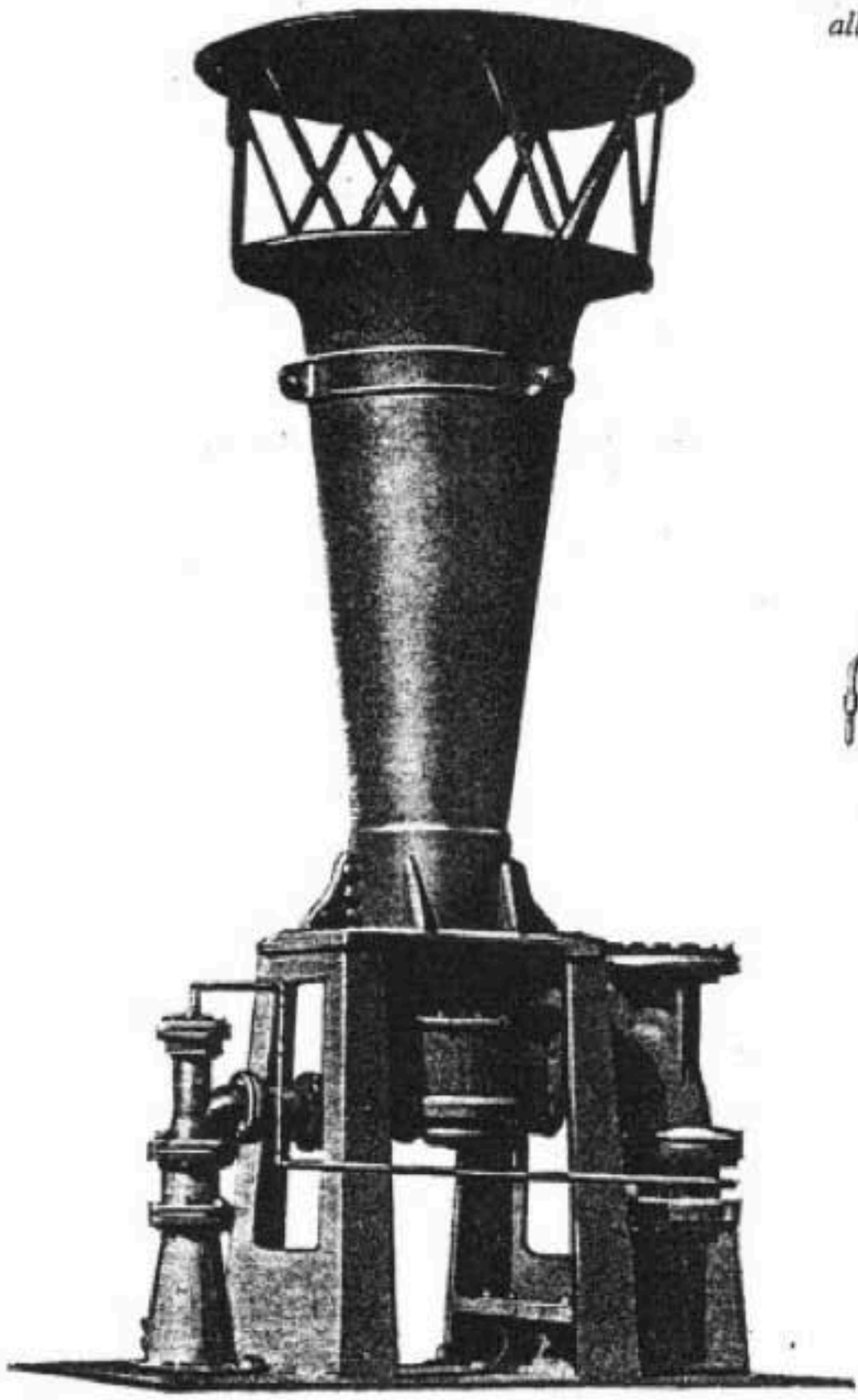

FIG. 2. *Vertical resonator for all-round distribution of sound.*

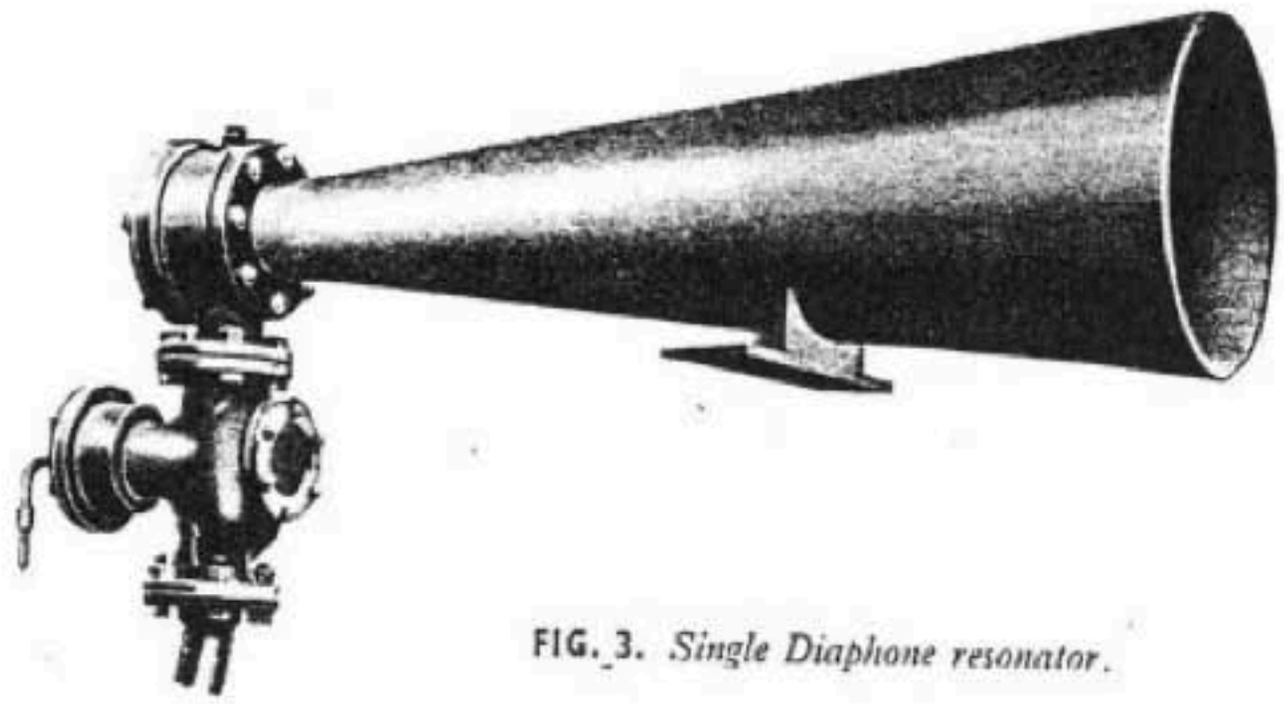

FIG. 3. *Single Diaphone resonator.*

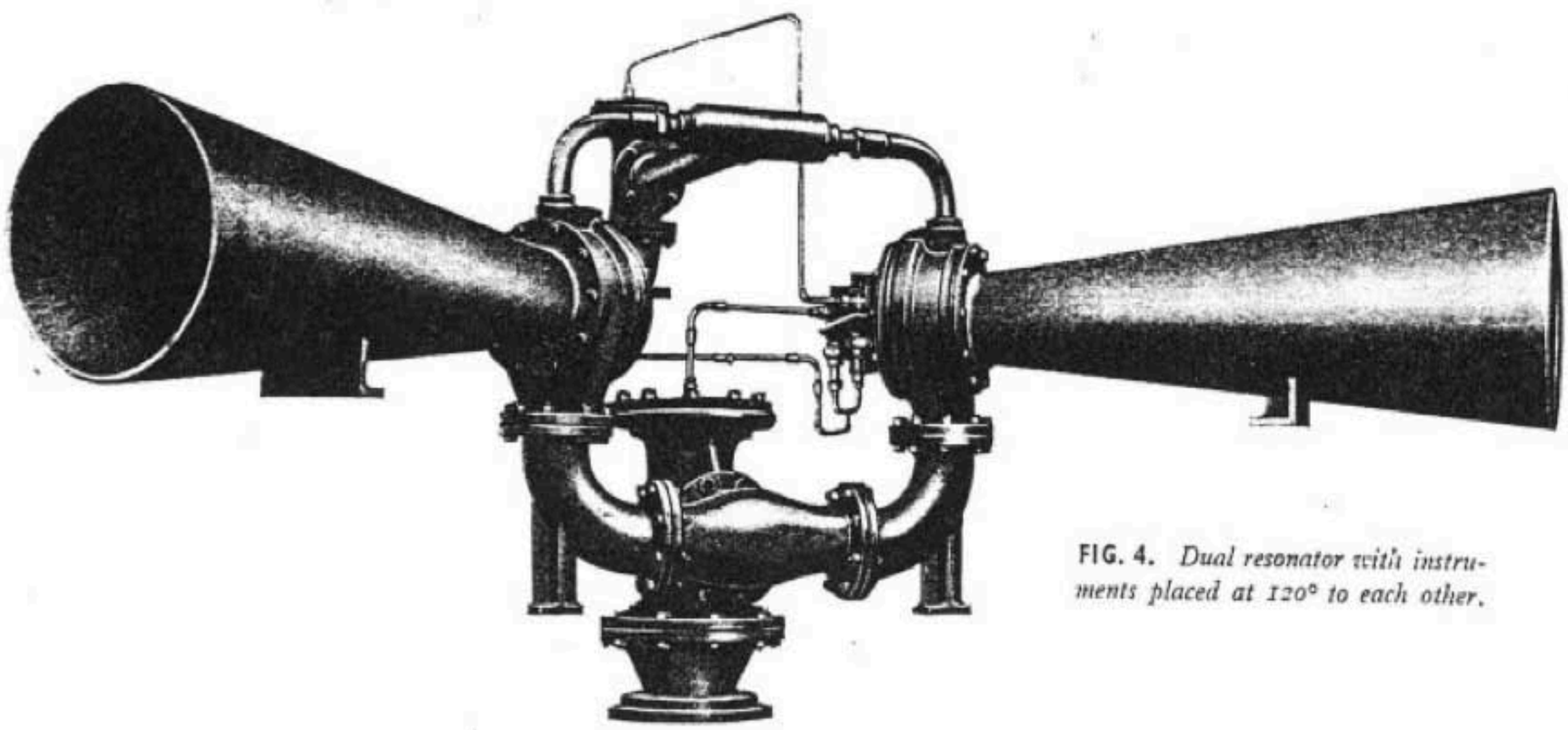

FIG. 4. *Dual resonator with instruments placed at 120° to each other.*

SOUND DISTRIBUTION

The arc over which the sound is distributed, and the direction of maximum sound, depend upon wind and atmospheric conditions. On a calm day, or when the wind is blowing along the axis of the resonator (Fig. 3), there is a fairly even distribution over 120° to 140° (60° to 70° on either side of the axis), and a reasonable distribution over 180°.

Arrangements of resonators are as follows:

(*a*) Fig. 4 illustrates a method of obtaining sound distribution over a wide arc by the installation of two instruments placed with their axes at 120° to one another. It will be noticed that a single timing mechanism controls one driving and one sounding valve, which admit air to both instruments simultaneously. These valves are of extra size to pass the double air consumption. With such an arrangement a fairly even sound distribution will be obtained over 240° to 270° on a calm day.

(*b*) Where all-round distribution of sound is required (e.g. on a light-vessel, island, or wave-swept station), it is customary to employ a vertical resonator with a 'mushroom' head (Fig. 2). In this case the Diaphone piston reciprocates in the vertical plane.

It is occasionally desirable to employ a resonator which may be rotated relative to the direction of the wind. Under such circumstances it is usual to employ a curved resonator, which is jointed in the middle, so that the mouth can be pointed in any direction; the Diaphone instrument remains stationary. An illustration of a curved-type resonator is given in Fig. 7, page 7.

HOUSING AND ARRANGEMENT

The Diaphone instrument and the valves which control its action must operate freely, and must be kept warm enough to prevent the freezing of any moisture which may condense in them, a precaution which is all the more necessary because the rapid expansion of air, which takes place when the instrument is blowing, itself causes a considerable fall in temperature. The whole should be housed in a good building and, where possible, arranged so that the resonator only projects through the wall.

Where there is the likelihood of much cold, some heating arrangement should be provided in the house—where electricity is available Chance Brothers usually supply tubular electric heaters for this purpose—which may be thermostatically controlled.

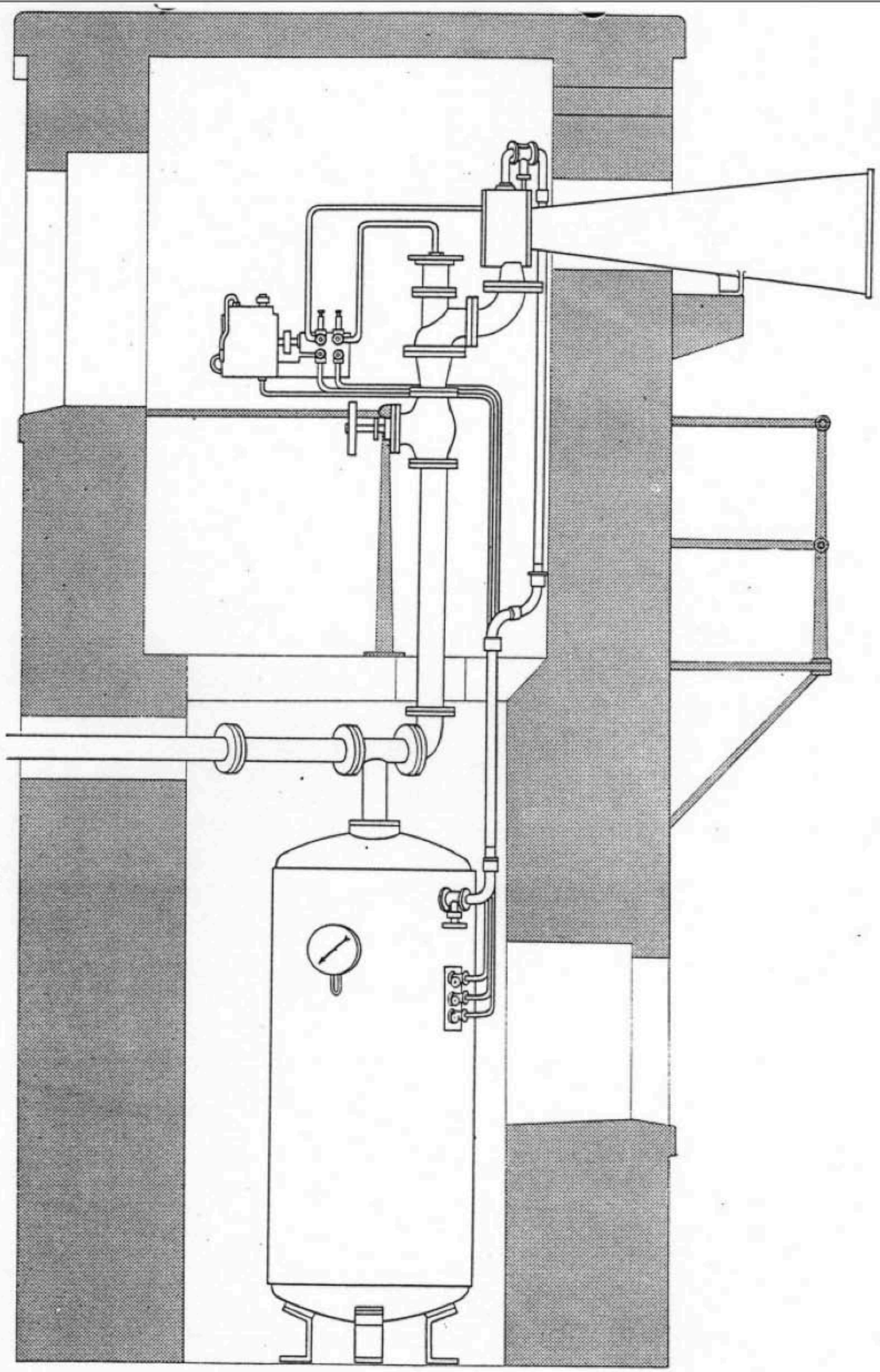

FIG. 6

VERTICAL DIAPHONE, TYPE F

as used on light-vessels, islands, or wave-swept stations.

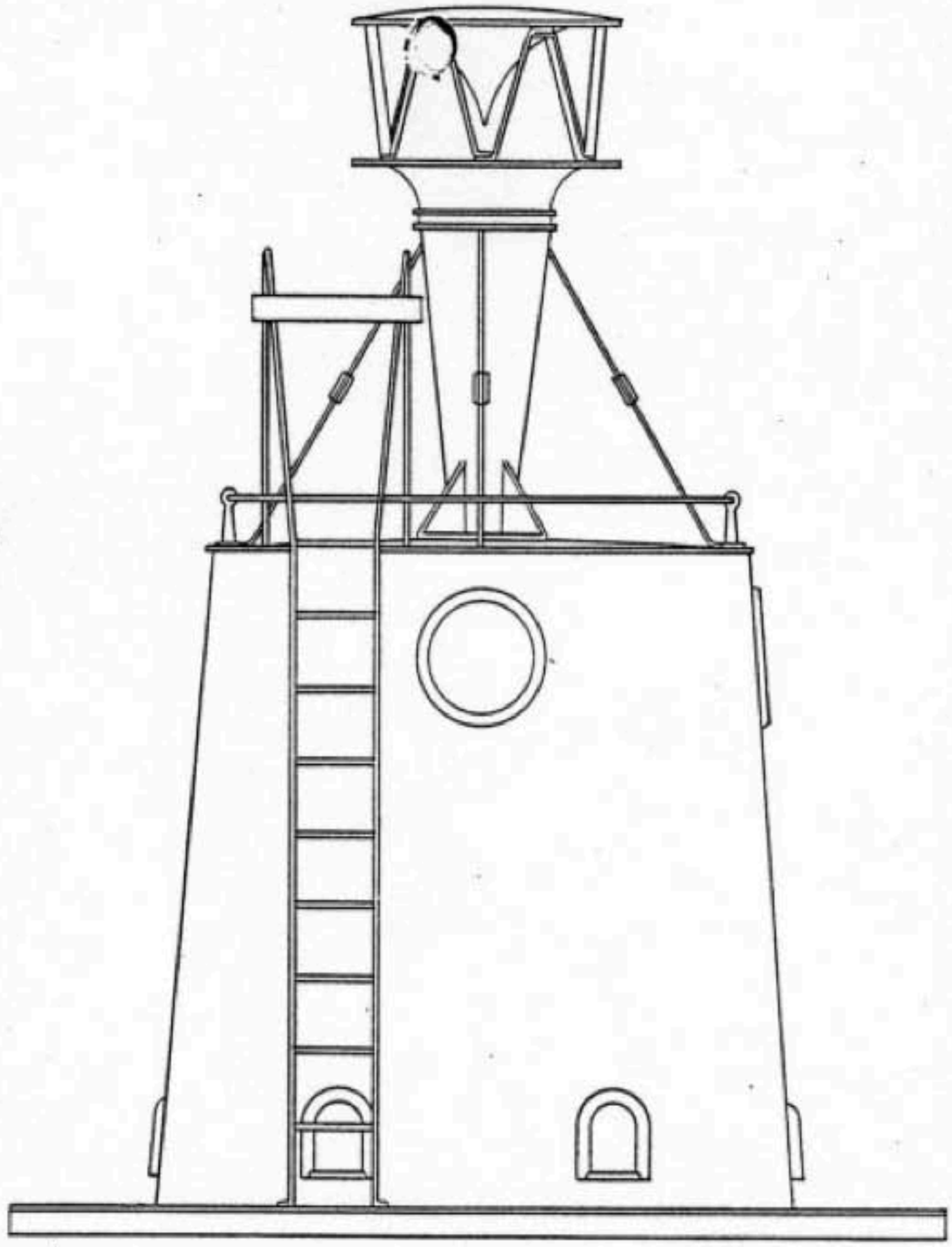

FIG. 5

ARRANGEMENT OF DIAPHONE HOUSE

All parts of the instrument, except the resonator, are protected from the elements.

FIG. 7

DIAPHONE, TYPE F, WITH MOVABLE RESONATOR

for use where it is desired to rotate the resonator relative to direction of wind.

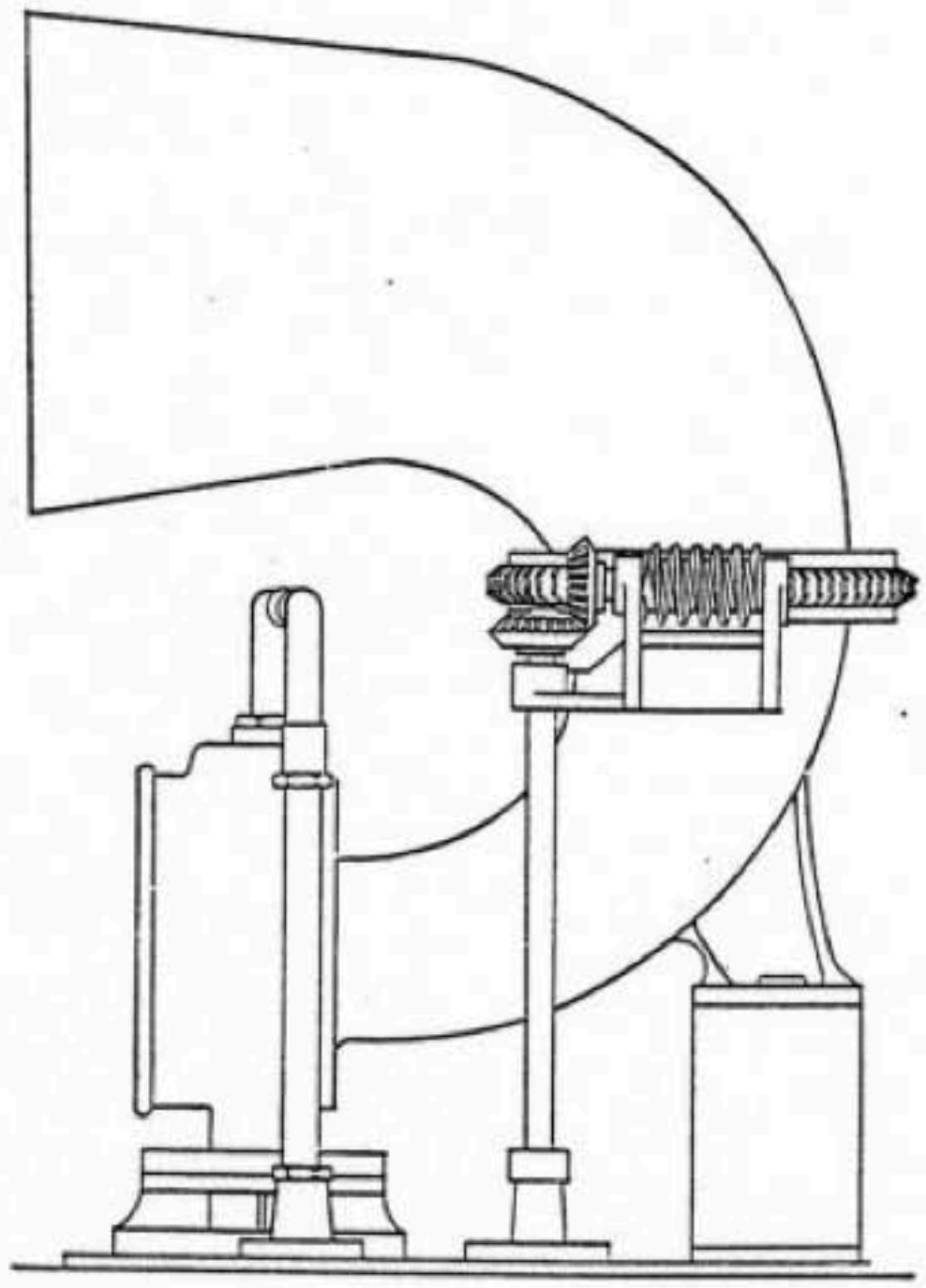

THE PLANT

A COMPLETE PLANT CONSISTS OF THE FOLLOWING :

a The Diaphone Instrument, Valves and Resonator.

b The Timing Mechanism for giving character to the blasts.

c The Air Compressors.

d The Power Unit for driving the compressors.

e The Air Receivers into which air is compressed by (c).

f The Air Piping connecting (c) to (e) and (e) to (a).

a THE INSTRUMENT

This has already been described on page 2.

b TIMING MECHANISM

The valves for driving and sounding the instrument are operated by cams through relay valves, and these cams may be rotated by various means.

(i) A small electric motor, where current is available (see Fig. 8).

(ii) An air-motor (see Fig. 10).

(iii) Where the instrument is placed close to the compressing and engine plant, we recommend that the cams be driven off the engine shaft through a reduction gear, either direct or by a belt drive (see Fig. 9).

Either (i) or (ii) is suitable for installation in a light-vessel or where the Diaphone itself is some distance from the power unit.

Length of Blasts.—The cams on the timing mechanism are arranged according to the lengths and character of blast required.

In order to maintain a steady note in the blasts, we recommend that the drop in pressure during each should not be more than 5 lb. per sq. in. (0·35 kg. per sq. cm.). This drop depends on the

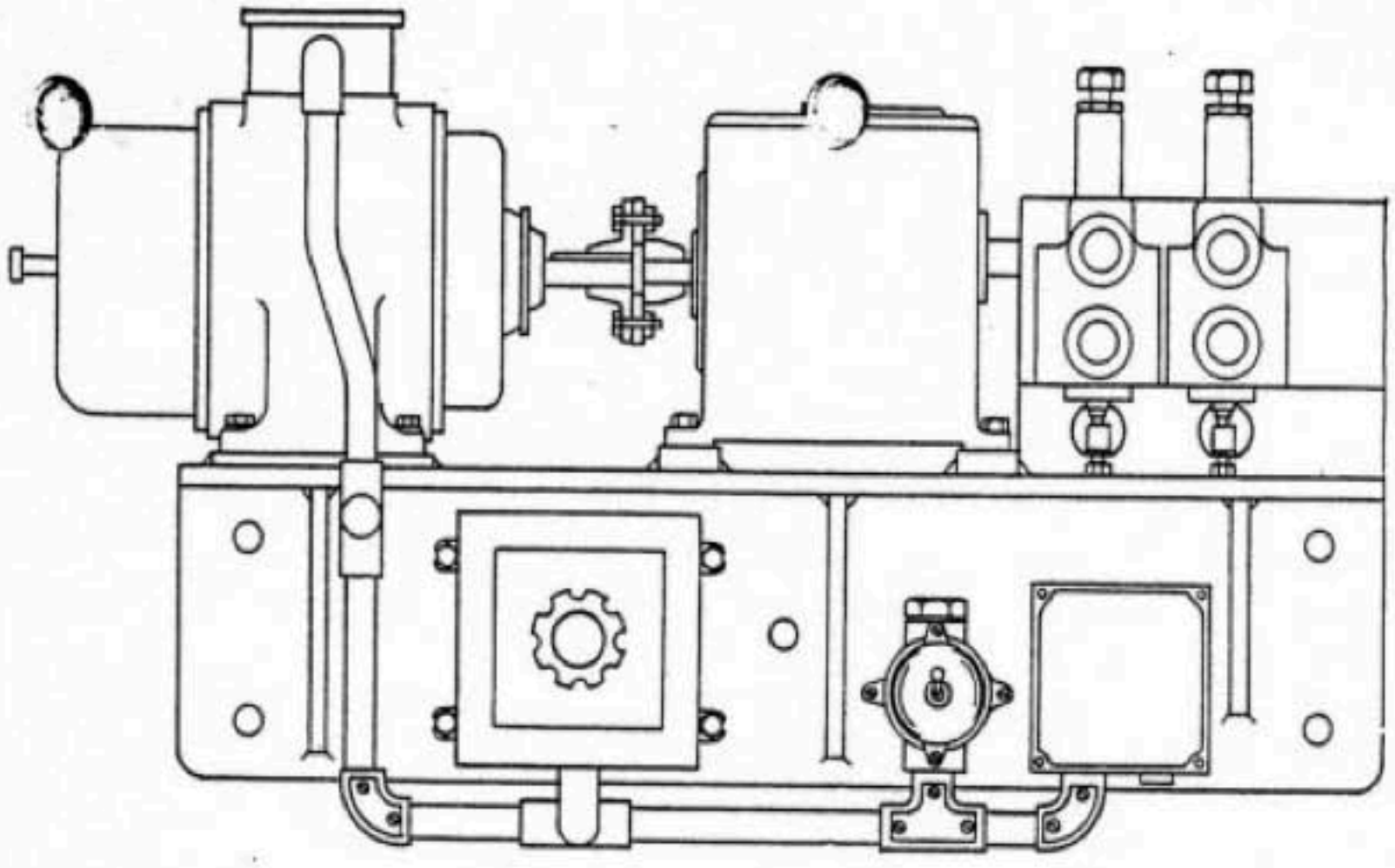

Electric motor driven timing mechanism. **FIG 8**

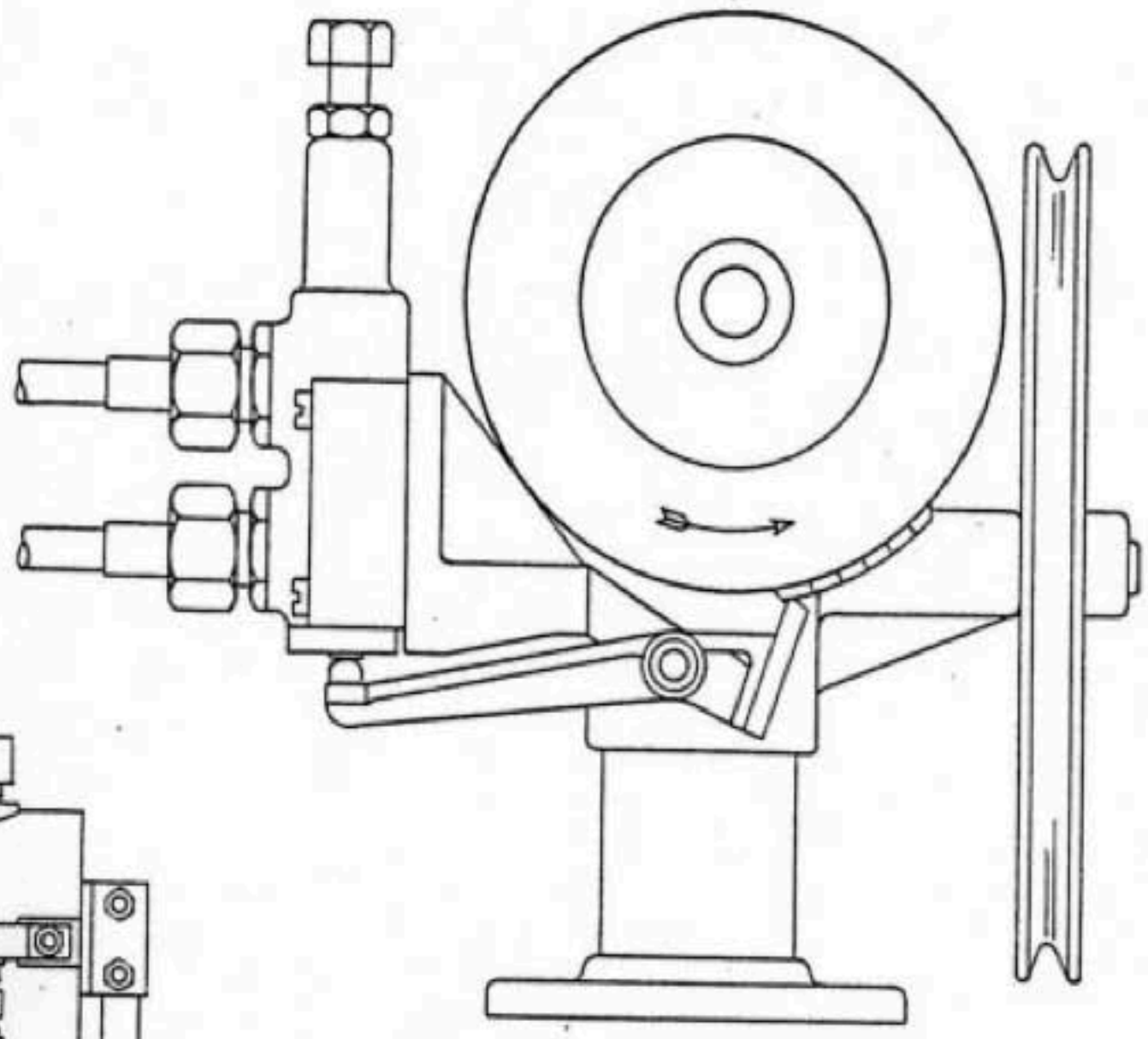

Shaft driven timing mechanism. **FIG 9**

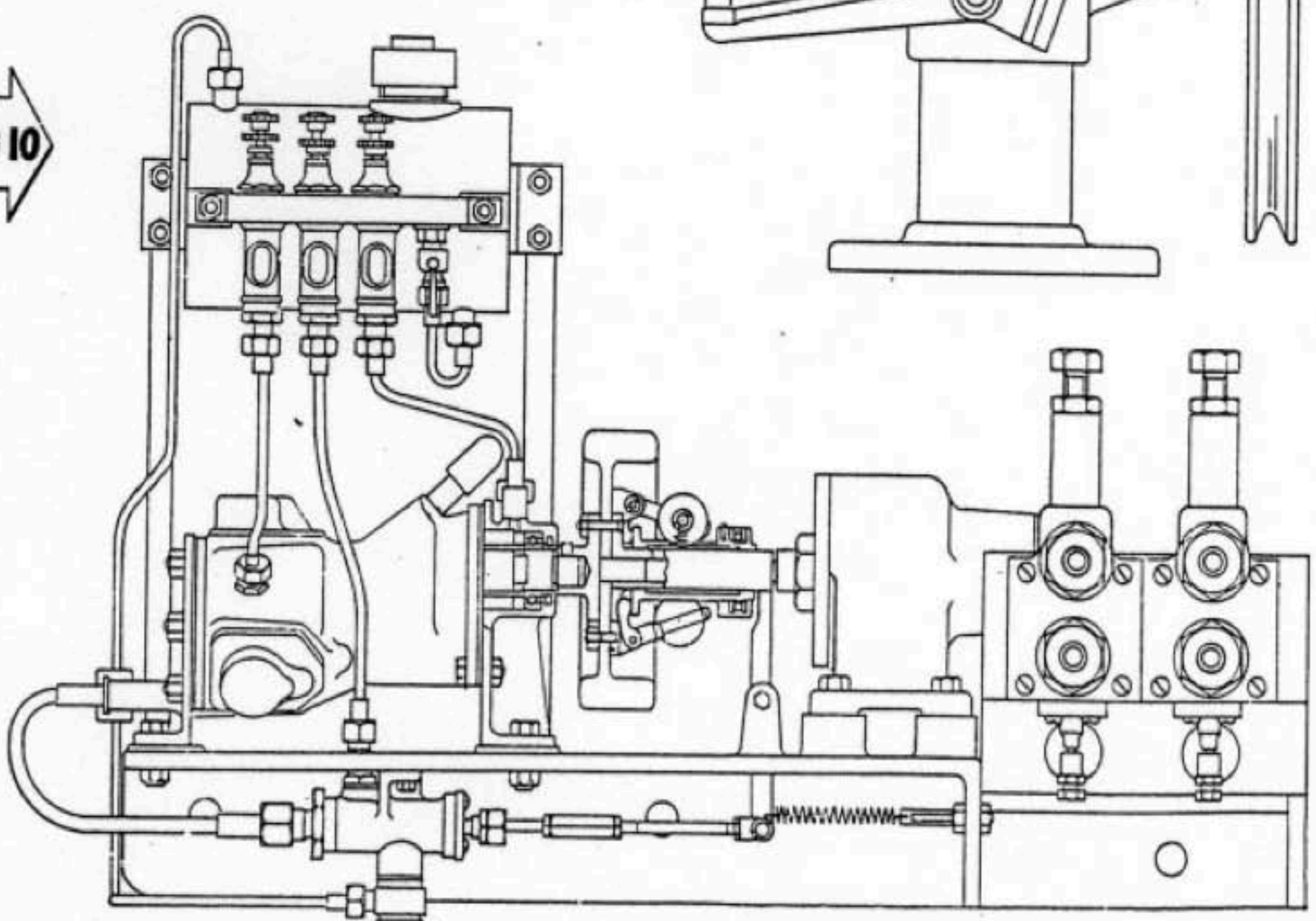

Motor driven mechanism. **FIG 10**

size of the air receiver, the capacity of the compressors and the length of blast. We have adopted various standards for the first two which will be found in the Plant Table (page 11), and these regulate the total length of blast which can be given per minute (i.e., the sum of the lengths of blasts during one minute). The maximum total length of blast recommended is also given in the Plant Table.

The Air Supply.—The sounding pressure is 35 lb. per sq. in. (2·46 kg. per sq. cm.). The instrument will, in fact, work and give a sound, although considerably reduced, down to a pressure of 10 lb. (0·7 kg.). This is a great advantage, in that it is not necessary to await full pressure before sounding (for instance, when fog suddenly descends). Reasonable blasts can be given at 15 lb. per sq. in. (1 kg. per sq. cm.).

Consumptions of free air for various sizes of instrument are as follows :—

Type	A	B	C	F	G	K	L
Air consumption (cu. ft. per sec. of blast) ..	1	3	5	15	23	45	60

C AIR COMPRESSORS

It is usual to employ single-stage compressors of the reciprocating type.

d POWER UNIT

The compressor sets and power drive are usuall provided in duplicate—one plant being run at time and the other acting as a standby—th arrangement also relieves one set of continuou duty, since the two can be used alternately.

The nature of the power plant depends upon sit conditions, but alternative means of driving th compressor are recommended as follows :—

(i) Electric motor

(ii) Diesel engine

(iii) Driven off shaft of Engine Generator equipment through a clutch (where both Engine Generator and Engine Compressor equipment are envisaged).

(i) is employed where electric current is available ;

(ii) and (iii) may be either hand-started or electrically started, and may operate under an attendant's control, or be fully automatic in operation. Where high-power plant is required, it is convenient to employ two engines and compressors for normal running, providing a third set for the standby. This is an economy in capital cost, since instead of two 32 h.p. plants, three 16 h.p. plants are employed, any two of which together will provide the power required.

PLANT TABLE

DIAPHONE		Cu. Ft. of free air used per second of blast	Maximum total length of blast per minute in seconds	AIR RECEIVERS								
				ONE STAGE			TWO STAGES					
				Storage and working pressure = 35 lb./sq. in.			Sounding Receiver 35 lb./sq. in.			Storage Receiver 100 lb./sq. in.		
TYPE	SIZE			No. of Recrs. Reqd.	Dia.	Height	No. of Recrs. Reqd.	Dia.	Height	No. of Recrs. Reqd.	Dia.	Height
A	—	1	8	1	3′ 0″	5′ 6″	—	—	—	—	—	—
B	1	3	2½	1	3′ 0″	5′ 6″	—	—	—	—	—	—
	2	3	8	1	4′ 6″	8′ 0″	1	2′ 6″	3′ 0″	1	2′ 6″	3′ 0″
C	1	5	5	1	4′ 6″	8′ 0″	1	2′ 6″	3′ 0″	1	2′ 6″	3′ 0″
	2	5	10	2	4′ 6″	8′ 0″	1	2′ 6″	3′ 0″	1	2′ 6″	5′ 0″
	3	5	15	3	4′ 6″	8′ 0″	1	2′ 6″	3′ 0″	1	3′ 0″	5′ 0″
F	1	15	3	1	6′ 0″	8′ 0″	1	2′ 6″	3′ 0″	1	2′ 6″	5′ 0″
	2	15	6	2	6′ 0″	8′ 0″	1	2′ 6″	3′ 0″	1	3′ 6″	5′ 0″
	3	15	12	4	6′ 0″	8′ 0″	1	2′ 6″	3′ 0″	1	4′ 0″	8′ 0″
G	1	23	2	1	6′ 0″	8′ 0″	1	3′ 0″	3′ 0″	1	2′ 6″	5′ 0″
	2	23	4	2	6′ 0″	8′ 0″	1	3′ 0″	3′ 0″	1	3′ 6″	5′ 0″
	3	23	8	4	6′ 0″	8′ 0″	1	3′ 0″	3′ 0″	1	4′ 0″	8′ 0″
K	1	45	2	2	6′ 0″	8′ 0″	1	3′ 0″	3′ 0″	1	3′ 6″	5′ 0″
	2	45	4	4	6′ 0″	8′ 0″	1	3′ 0″	3′ 0″	1	4′ 0″	8′ 0″
	3	45	8	8	6′ 0″	8′ 0″	1	3′ 0″	3′ 0″	1	5′ 6″	8′ 0″
L	1	60	2½	3	6′ 0″	8′ 0″	1	3′ 0″	3′ 0″	1	4′ 0″	6′ 0″
	2	60	5	6	6′ 0″	8′ 0″	1	3′ 0″	3′ 0″	1	5′ 0″	8′ 0″